Installation Guide

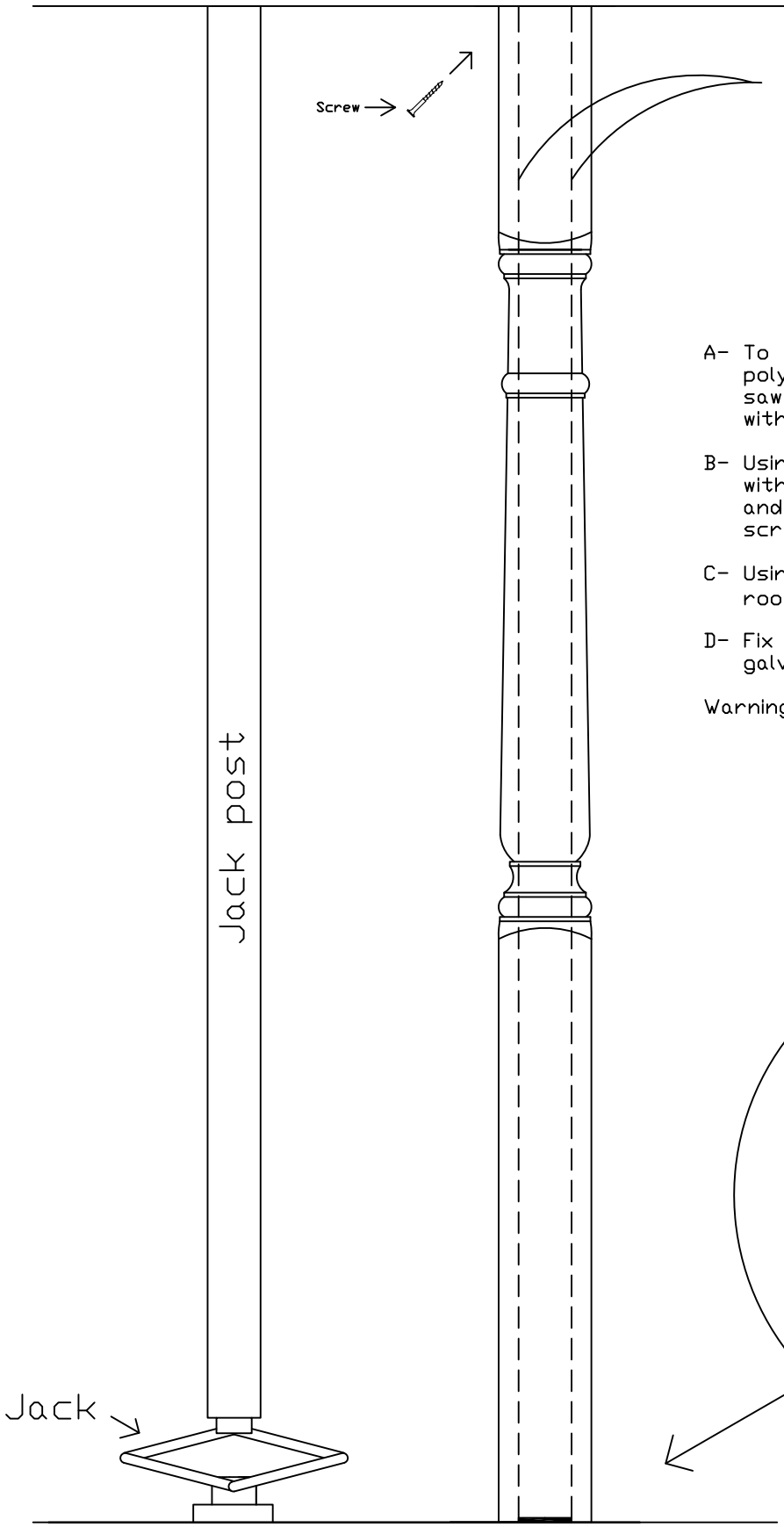

Aluminium Pipe 3″ D.
Load-bearing
Structural Capacity
of 5000 lbs.

A- To shorten column, first cut the polyurethane outer section using a wood saw and then cut the aluminium pipe core with a metal saw.

B- Using a plumb-line, set and fix the disk with polyurethane adhesive (PL PREMIUM) and galvanized screws or Tapecon type screws.

C- Using a jack and jack-post, raise the roof ¼″ and slide column into place.

D- Fix the top of the column in place using galvanized screws.
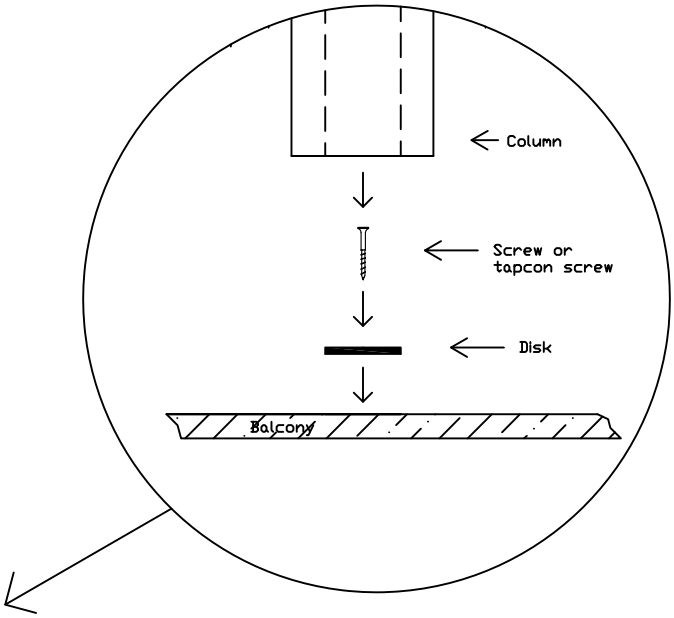
Warning!!! When installing the column, always make sure that the roof weight-load is on the aluminium pipe ONLY as the polyurethane by itself has no load-bearing capacity. If you need to cut the column, cut the polyurethane ¼″ shorter than the aluminium pipe.