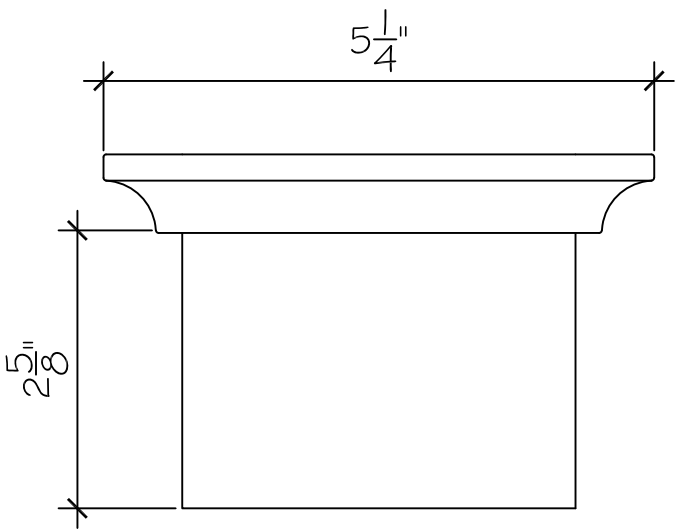
5 1/4"
2 5/8"

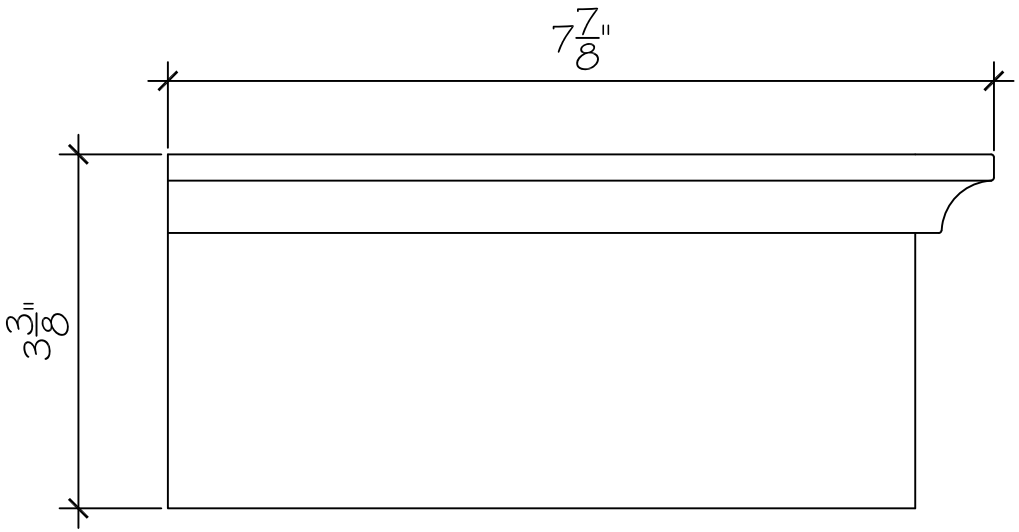
7 7/8"
3 3/8"